Valve body identification

Type: 4R44E, 4R55E & 5R55E

VALVE-BODY/MECHATRONIC REBUILDING

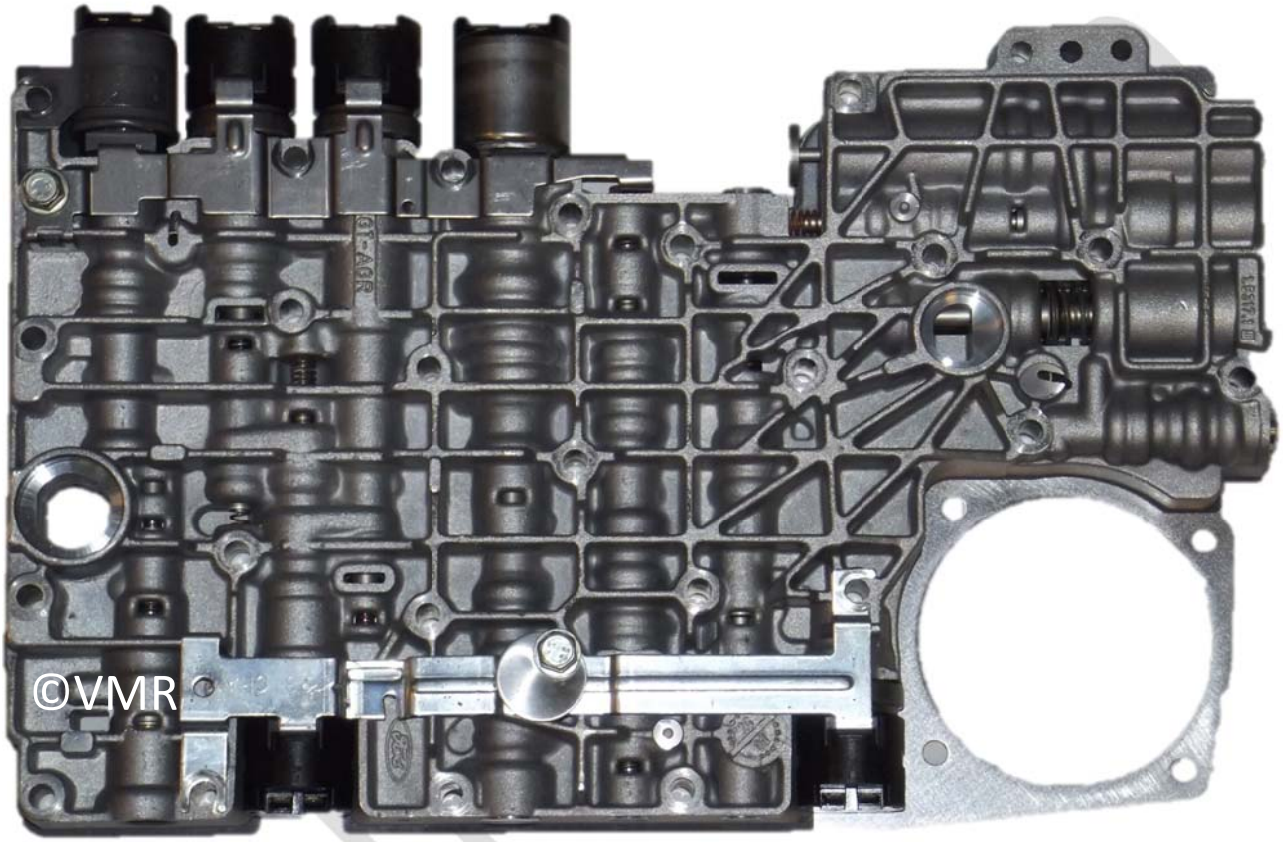

4R44E, 4R55E, 5R55E

VMR part number - FO5R55E

www.vmrvalvebody.com